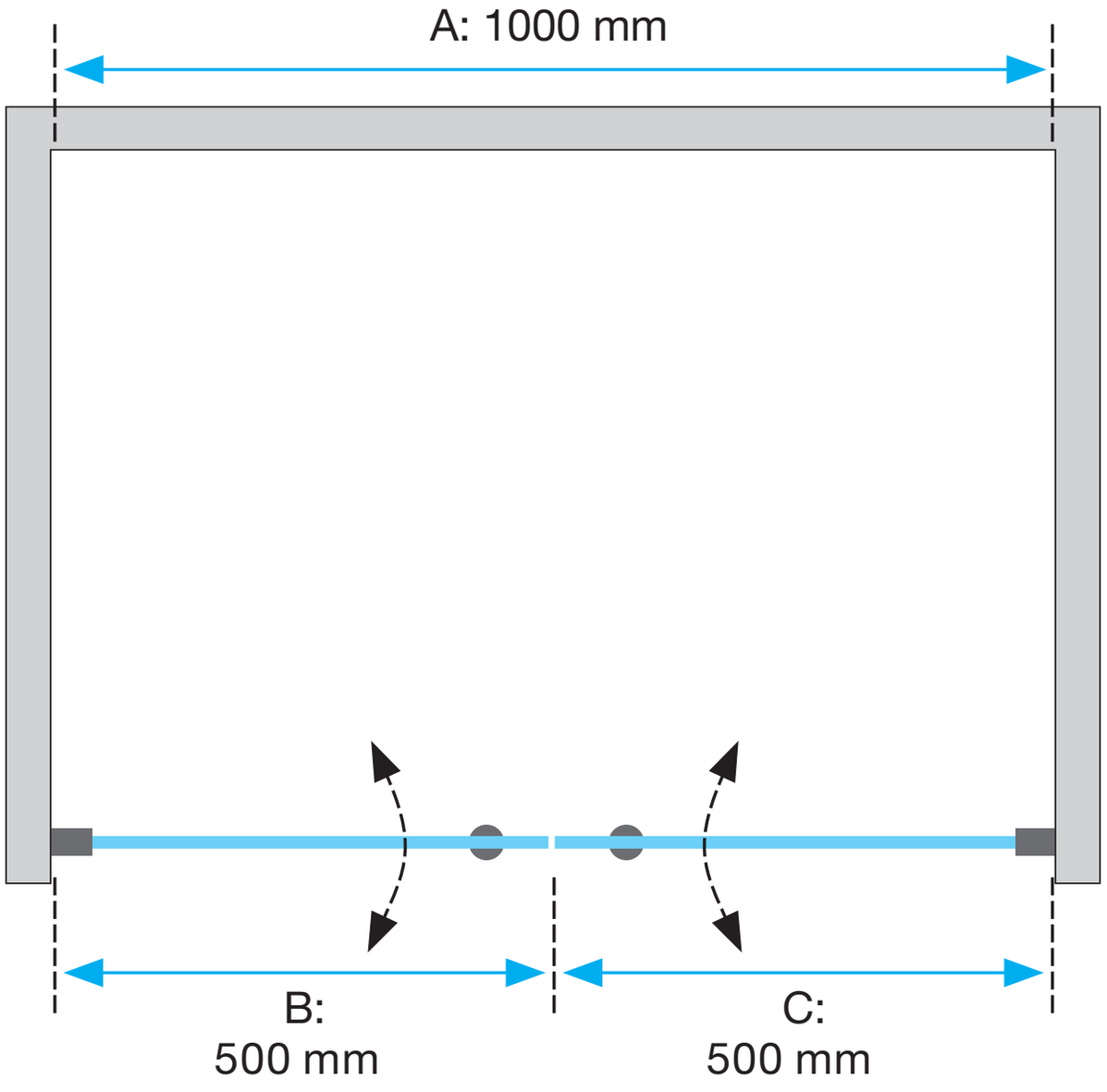Duo